XIAMEN HOPERGY PHOTOVOLTAIC TECHNOLOGY CO. LTD.
630 Tonghong Road, Tongan District, Xiamen 361100, CHINA
P +86 592 5689685 F +86 592 5689685 E info@hopergy.com

Product Specification HOP-TRB-B01 Ver: 1.0

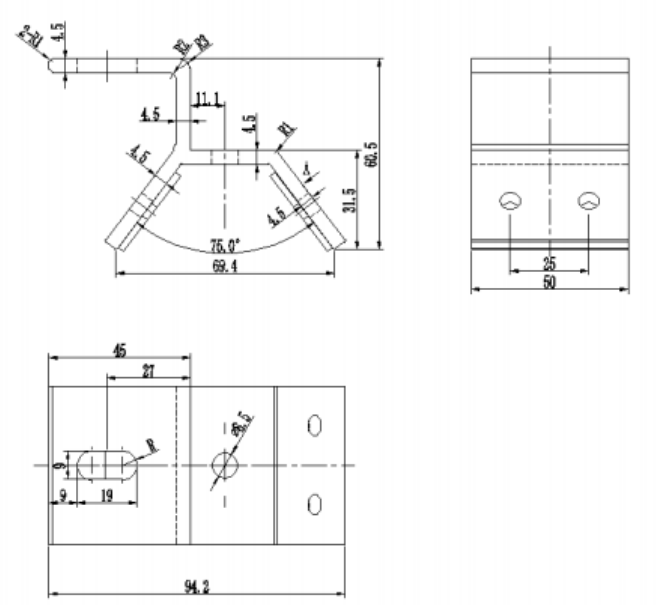

Name	TIN ROOF INTERFACE BRACKET #1
Stock Code	TRB-B01
Weight(g)	176
BOM	HOP-H26-0050 (AL6005-T5) x 1 HOP-K27-0050 (EPDM) x 4
Packing	200pcs
Carton size	540×220×200